Paper roll holder ADRIA

Technical facts

Paper roll holder for wall mounting
Fixation accessories (included)

Surface finish: Aluminium anodised
Ground stainless steel
Powder-coated (on request)

APRH:

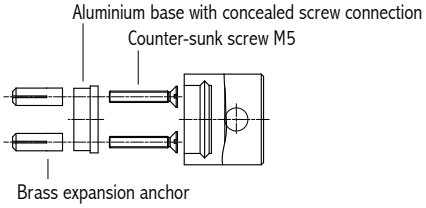

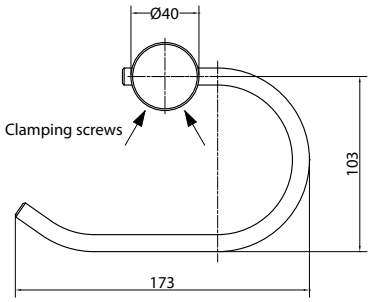

Article	Description	Order number
Paper roll holder APRH	Aluminium anodised	80APRHEV
Paper roll holder APRH	Ground stainless steel	80APRHES

Notes