Stainless steel butt hinge SYS-ES13-1/3

Technical facts

Size:	120,0 mm
Knuckle diameter:	17 mm
Hinge pin diameter:	12 mm
Hinge pin:	Stainless steel
Spring core:	Sleeve: brass, Spring: spring steel Stainless steel spring (additional charge)
Recommended fixation:	Direct fixation to door-narrow-side (not included)
Packing unit:	10 hinges

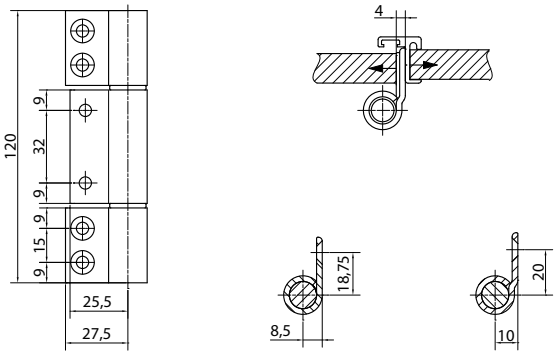

Tender specification

SYSKO-Stainless steel butt hinge Type: SYS-ES13-1/3 for unrebated partition walls
3-parts butt hinge for fixation to door-narrow-side without cutout
Hinge surface ground stainless steel
Available as standard hinge (ES13-1/3S) or spring hinge (ES13-1/3F)

Article	Description	Order number
ES13-1/3S DIN L	Standard hinge ground stainless steel	84ES1313SL
ES13-1/3S DIN R	Standard hinge ground stainless steel	84ES1313SR
ES13-1/3F DIN L	Spring hinge ground stainless steel	84ES1313FL
ES13-1/3F DIN R	Spring hinge ground stainless steel	84ES1313FR
Additional charge	Sleeve: brass, Spring: stainless steel	MP84FKFES120

Notes