Stainless steel unilateral twin angle light

Technical facts

Stable panel holder for wall mounting
Fixation accessories for panels (additional charge)
Fixation accessories for brickwork (not included)

Material: Stainless steel

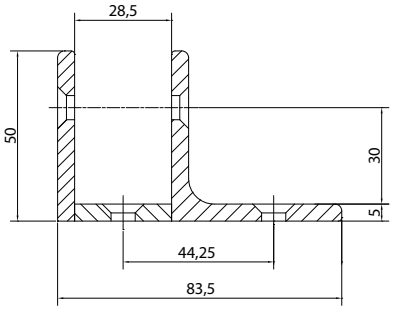

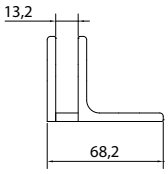

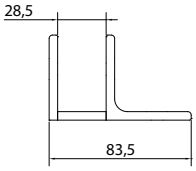

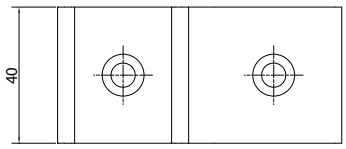

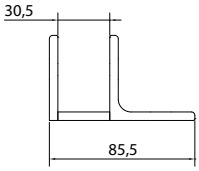

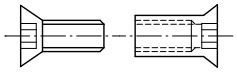

Sleeve nut counter-sunk with hexagon socket and counter-sunk screw with hexagon socket

Article	Panel thickness	Surface finish	Order number
Unilateral twin angle light SWDW - **L**	13 mm 28 mm 30 mm	Ground stainless steel	83SWDWEL13ES 83SWDWEL28ES 83SWDWEL30ES
Additional charge	13 mm 28 mm 30 mm	Sleeve nut and screw (stainless steel)	MP83SWSES130 MP83SWSES280 MP83SWSES300

Notes