Latch system Combination II

Technical facts

Type:	VEV II aluminium anodised VEV II aluminium powder-coated (11 colours – colour chart enclosed) VES II ground stainless steel
Design:	Rotary knob/indicator knob with rosette incl. integrated indicator (red/green)
Locking type:	Locking cartridge in door leaf With flat latch in stainless steel (included)
Emergency release:	Coin-operated in plastic black
Door thickness:	13 mm (only)

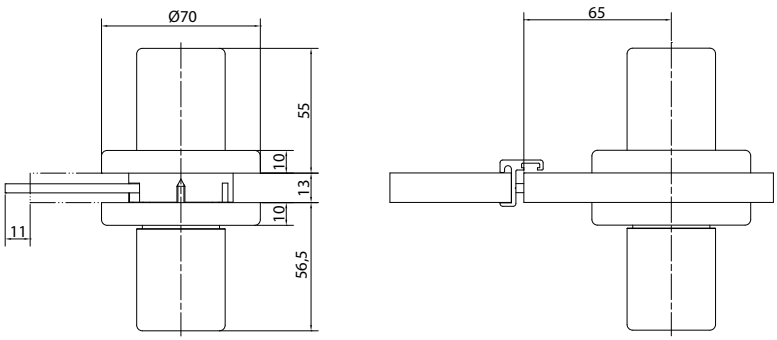

Article	Description	Order number
VEV II left VEV II right	Latch system Combination II aluminium anodised	82VEV2L 82VEV2R
VEV II left VEV II right	Latch system Combination II aluminium powder-coated (11 colours - colour chart enclosed)	82VEV2L_ _ _ _ 82VEV2R_ _ _ _ (Please specify RAL no.!)
VES II left VES II right	Latch system Combination II ground stainless steel	82VES2L 82VES2R
Additional charge	Emergency release with hexagon socket in stainless steel	MP82INES
Additional charge	Emergency release key for hexagon socket SW7	MP82SW7

Notes